ITEM NO.	PART NUMBER	DESCRIPTION	DRAWING #	QTY.
1	FP-HG100	END PLATE. TOP RAIL, HG.	50-1104	2
2	FP-HG110	KEEPER, STAND HOLDER WITH HOLES, HG	50-1106	1
3	FP-HG160	KEEPER, STAND HOLDER W/OUT HOLE, HG	50-1103	1
4	FP-PS-FLOOR GST	FLOOR GUSSET PRO SPEAR	15-2216	2
5	RT 4x2x.1875 L 73.75	LENGTH : 73-3/4"	STOCK	1
6	ST-MT 3 x 2.625 L 2.5	LENGTH: 2-1/2"	STOCK	4

	REVISIONS		
REV.	DESCRIPTION	DATE	APPROVED
B	REV. TO FP-PS-FLOOR GST FROM FP-HG101 & REV TO FP-HG160	7/31/2012	

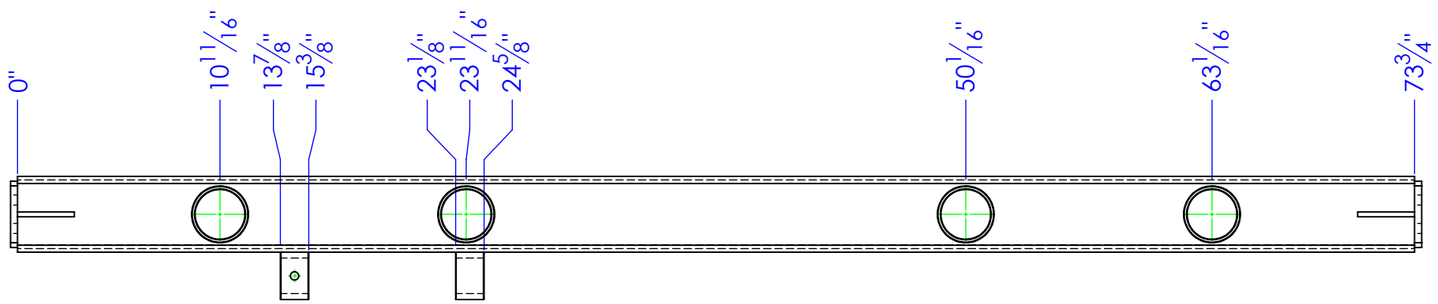

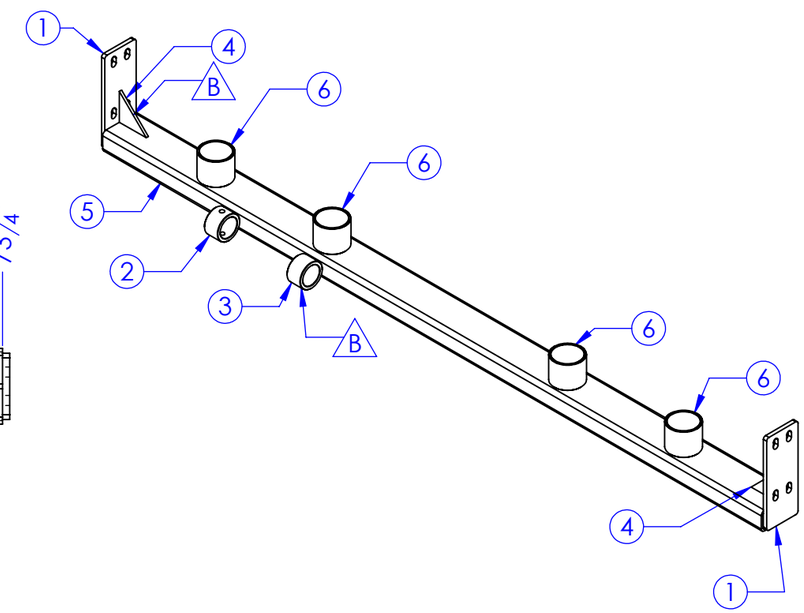

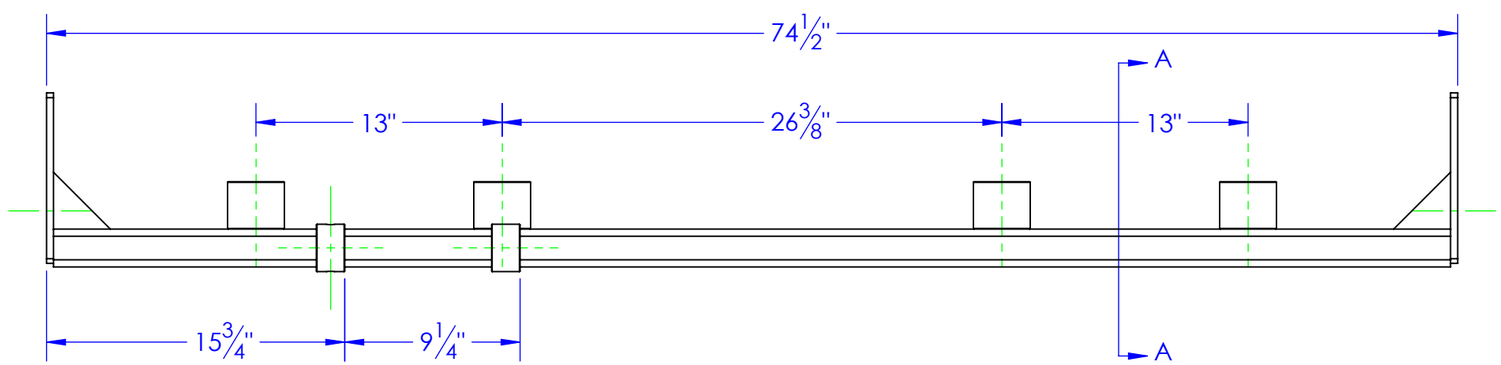

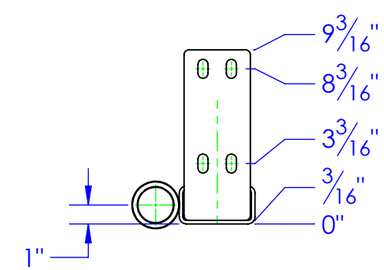

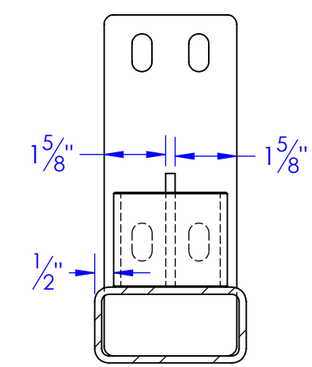

SECTION A-A
SCALE 1 : 4

PROPRIETARY AND CONFIDENTIAL

THE INFORMATION CONTAINED IN THIS DRAWING IS THE SOLE PROPERTY OF <INSERT COMPANY NAME HERE>. ANY REPRODUCTION IN PART OR AS A WHOLE WITHOUT THE WRITTEN PERMISSION OF <INSERT COMPANY NAME HERE> IS PROHIBITED.

UNLESS OTHERWISE SPECIFIED:

DIMENSIONS ARE IN INCHES
TOLERANCES:
FRACTIONAL ±1/16
ANGULAR: MACH ± 1 BEND ±
TWO PLACE DECIMAL ±010
THREE PLACE DECIMAL ±005

MATERIAL

DO NOT SCALE DRAWING

	NAME	DATE
DRAWN	HEATH	7/31/2012
PART #		
ASM #	SUB-HG200	

COMMENTS:

TOP RAIL, HG-5678, WLDMT.

P.O. BOX 248, SABETHA KS. 66534
(785) 284-3674 FAX (785) 284-3931

TRIPLE C INC.

SIZE	DWG. NO.	REV
B	50-1102 B	B

SCALE: 1:8 | WEIGHT: 55.66 | SHEET 1 OF 1